SAF-HOLLAND Group

Service Manual

INTEGRAL® Disc Brake Axles

P89 Parallel Spindle with Precision Bearings

P89 PLUS™

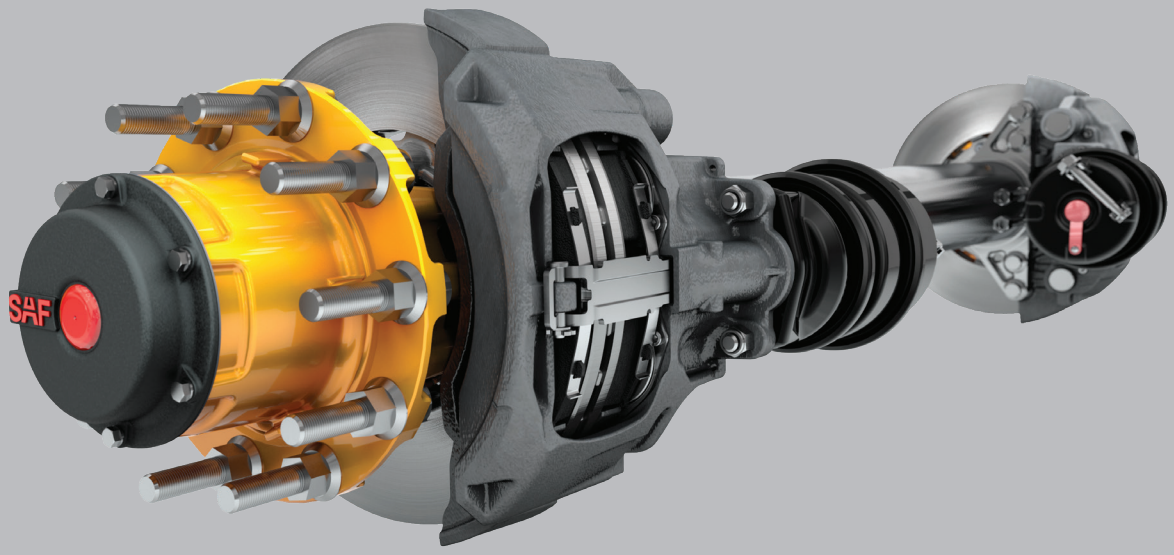

XL-SA20024UM-en-US Rev G

SAF Holland Group

Contents	Page
Introduction	2
Warranty	2
Notes, Cautions, and Warnings	2
Section 1 – General Safety Instructions	3
Section 2 – General Service / Maintenance Instruction	4
Section 3 – Model Identification	5
Section 4 – Identification Tag	5
Exploded View and Parts List	6
Section 5 – Caliper Identification and Inspection	7

Contents	Page
Section 6 – Disc Brake Inspection	9
Section 7 – Hub Inspection	11
Section 8 – Servicing the Disc Brake/Hub Unit	15
Section 9 – Brake Caliper Servicing	20
Section 10 – Wheel Installation Procedure	21
Section 11 – Disc Brake Options	21
Section 12 – Torque Chart	23
Section 13 – Routine Service Schedule	24
Section 14 – Troubleshooting	25

Introduction

This manual provides the necessary information for the maintenance, inspection and safe operation of the SAF® P89 Plus Disc Brake system. Refer to XL-SA20018UM-en-US for P89 Disc Brake System.

For axle end/brake replacement components contact SAF-HOLLAND® Customer Service at 888-396-6501.

Read this manual before using or servicing this product and keep it in a safe location for future reference. Updates to this manual, which are published as necessary, are available on the internet at www.safholland.us.

Use only SAF-HOLLAND Original Parts to service your SAF-HOLLAND INTEGRAL Disc Brake axle. A list of technical support locations that supply SAF-HOLLAND Original Parts and an Aftermarket Parts Catalog are available on the internet at www.safholland.us or contact Customer Service at 888-396-6501.

Warranty

Refer to the complete warranty for the country in which the product will be used. A copy of the written warranty is included with the product or available on the internet at www.safholland.us.

Notes, Cautions, and Warnings

Before starting any work on the unit, read and understand all the safety procedures presented in this manual. This manual contains the terms "NOTE", "IMPORTANT", "CAUTION", and "WARNING" followed by important product information. These terms are defined as follows:

NOTE: Includes additional information to enable accurate and easy performance of procedures.

IMPORTANT: Includes additional information that if not followed could lead to hindered product performance.

CAUTION — Used without the safety alert symbol, indicates a potentially hazardous situation which, if not avoided, could result in property damage.

⚠CAUTION — Indicates a potentially hazardous situation which, if not avoided, could result in minor or moderate injury.

⚠WARNING — Indicates a potentially hazardous situation which, if not avoided, could result in death or serious injury.

XL-SA20024UM-en-US Rev G · 2023-09-19 · Amendments and Errors Reserved · © SAF-HOLLAND, Inc., SAF-HOLLAND, HOLLAND, SAF, and logos are trademarks of SAF-HOLLAND S.A., SAF-HOLLAND GmbH, and SAF-HOLLAND, Inc.

1. General Safety Instructions

General and Servicing Safety Instructions

- Read and observe all Warning and Caution hazard alert messages. The alerts provide information that can help prevent serious personal injury, damage to components, or both.

⚠WARNING Failure to follow the instructions and safety precautions in this manual could result in improper servicing or operation leading to component failure which, if not avoided, could result in death or serious injury.

- All maintenance should be performed by a properly trained technician using proper/special tools, and safe procedures.

NOTE: In the United States, workshop safety requirements are defined by federal and/or state Occupational Safety and Health Act (OSHA). Equivalent laws may exist in other countries. This manual is written based on the assumption that OSHA or other applicable employee safety regulations are followed by the location where work is performed.

- Properly support and secure the vehicle from unexpected movement when servicing the unit.

⚠WARNING Failure to properly support and secure the vehicle and axles prior to commencing work could create a crush hazard which, if not avoided, could result in death or serious injury.

- Several maintenance procedures in this manual require re-positioning of the brake chamber, brake calipers and/or ABS system. Consult the manufacturer's manual for procedures on the proper operation of brake chamber, brake calipers and/or ABS system.
- Service both roadside and curbside of an axle. Worn parts should be replaced in sets. Key components on each axle's braking system, such as friction material and rotors will normally wear over time.

IMPORTANT: Key components on each axle's braking system, including brake pads and brake rotors, are intended to wear over time. Worn parts should be replaced in sets on both the driver and curb side of an axle.

⚠WARNING Failure to follow manufacturer's instructions regarding spring pressure or air pressure control could allow uncontrolled release of energy which, if not avoided, could result in death or serious injury.

- The wheel contact surfaces between the wheel and hub MUST NOT receive additional paint.

IMPORTANT: The wheel contact surfaces MUST be clean, smooth and free from grease.

⚠WARNING Failure to keep wheel and hub contact surfaces clean and clear of foreign material could allow wheel/hub separations which, if not avoided, could result in death or serious injury.

- Only the wheel and tire sizes approved by the trailer builder can be used.

Operational and Road Safety Instructions

- Before operating vehicle, ensure that the maximum permissible axle load is not exceeded and that the load is distributed equally and uniformly.
- Make sure that the brakes are not overheated from continuous operation.

⚠WARNING Failure to minimize the use of brakes during overheating conditions could result in deterioration of brake efficiency which, if not avoided, could result in death or serious injury.

- The parking brake MUST NOT be immediately applied when the brakes are overheated. Refer to the rotor wear inspection information in Section 6.3.

CAUTION If the parking brake is immediately applied to the brakes when overheated, the brake discs could be damaged by different stress fields during cooling.

- Observe the operating recommendation of the trailer manufacturer for off-road operation of the installed axles.

IMPORTANT: The definition of OFF-ROAD means driving on non-asphalt/non-concrete routes, e.g. gravel roads, agricultural and forestry tracks, on construction sites and in gravel pits.

IMPORTANT: Off-road operation of axles beyond the approved application design could result in damage and impair suspension system performance.

- SAF® axles require routine service, inspection and maintenance in order to maintain optimum performance, and operational safety as well as an opportunity to recognize natural wear and defects before they become serious. Refer to the Routine Service Schedule in Section 13.

⚠WARNING Failure to inspect and maintain the SAF-HOLLAND INTEGRAL disc brake axle as outlined in Section 13 can result in brake or wheel bearing failure which, if not avoided, could result in death or serious injury.

IMPORTANT: Use only SAF-HOLLAND Original Parts to service the SAF-HOLLAND INTEGRAL disc brake axle.

⚠WARNING Failure to maintain the SAF-HOLLAND INTEGRAL disc brake with SAF-HOLLAND Original Parts can result in brake or wheel bearing failure which, if not avoided, could result in death or serious injury.

2. General Service/Maintenance

1. Conduct regular visual checks of the brakes, tires and all chassis components. Refer to Section 13 for more information:
   a. Inspect for secure mounting, wear, leaks, corrosion and damage.
   b. Check for loose, broken or cracked air hoses, air system leaks, and damaged components.
   c. Check that brake hoses and cables are properly secured.
   d. For proper brake pad wear, check that there is enough clearance to allow the caliper full movement during normal operation.
2. Check the brake pads at regular service intervals to ensure that the brake pad hold down springs are in the correct position, and that brake pads are NOT worn beyond the minimum wear limits described in this manual.
3. When replacing brake pads, inspect the rotors for signs of wear, cracks, grooves, scoring or hot spots.
4. Visually check the brake caliper at regular service intervals as defined by the brake caliper manufacturer's basic inspection program. Refer to Section 6.1 of this manual for further information.
5. Check the spring brake chambers to make sure the parking springs are NOT caged in the released position. Be sure the dust plugs are properly installed.
6. Make sure that the vent holes in the air brake chamber are NOT covered with snow, ice, mud, etc.
7. Inspect the wheel bearing unit for grease leaks at every brake pad change.
8. Visually check the brake assembly (e.g. pads, rotor, etc.) for oil or grease contamination.
9. Check that all dust caps and boots are present and in good condition.
10. Regularly conduct general safety checks in accordance with any applicable laws.
11. After every wheel change, the wheel nuts MUST be re-tightened to the specified torque level after the initial 100 miles of operation, and then at every regular service interval.

CAUTION Failure to re-tighten wheel nuts at specified intervals could result in component failure which, if not avoided, could result in damage to property.

Use only SAF-HOLLAND Original Parts to service your SAF-HOLLAND INTEGRAL Disc Brake Axle.

XL-SA20024UM-en-US Rev G · 2023-09-19 · Amendments and Errors Reserved · © SAF-HOLLAND, Inc., SAF-HOLLAND, HOLLAND, SAF, and logos are trademarks of SAF-HOLLAND S.A., SAF-HOLLAND GmbH, and SAF-HOLLAND, Inc.

3. Model Identification

The disc brake axle serial tag is located near the center of the axle tube ***(Figure 1).***

Figure 1

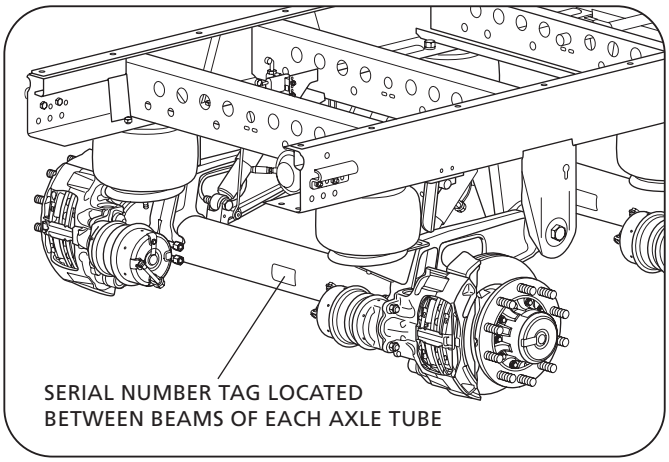

4. Identification Tag

The sample tag shown will help you interpret the information on the SAF-HOLLAND Inc. serial number tag. The model number, axle body part number and serial number are listed on the tag ***(Figure 2).***

Record your tag numbers below for future quick reference.

Axle Body Part Number: _____

Model Number: _____

Serial Number: _____

Figure 2

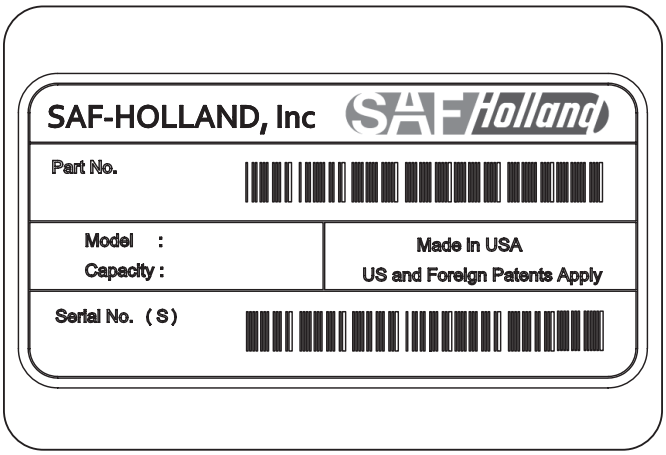

XL-SA20024UM-en-US Rev G · 2023-09-19 · Amendments and Errors Reserved · © SAF-HOLLAND, Inc., SAF-HOLLAND, HOLLAND, SAF, and logos are trademarks of SAF-HOLLAND S.A., SAF-HOLLAND GmbH, and SAF-HOLLAND, Inc.

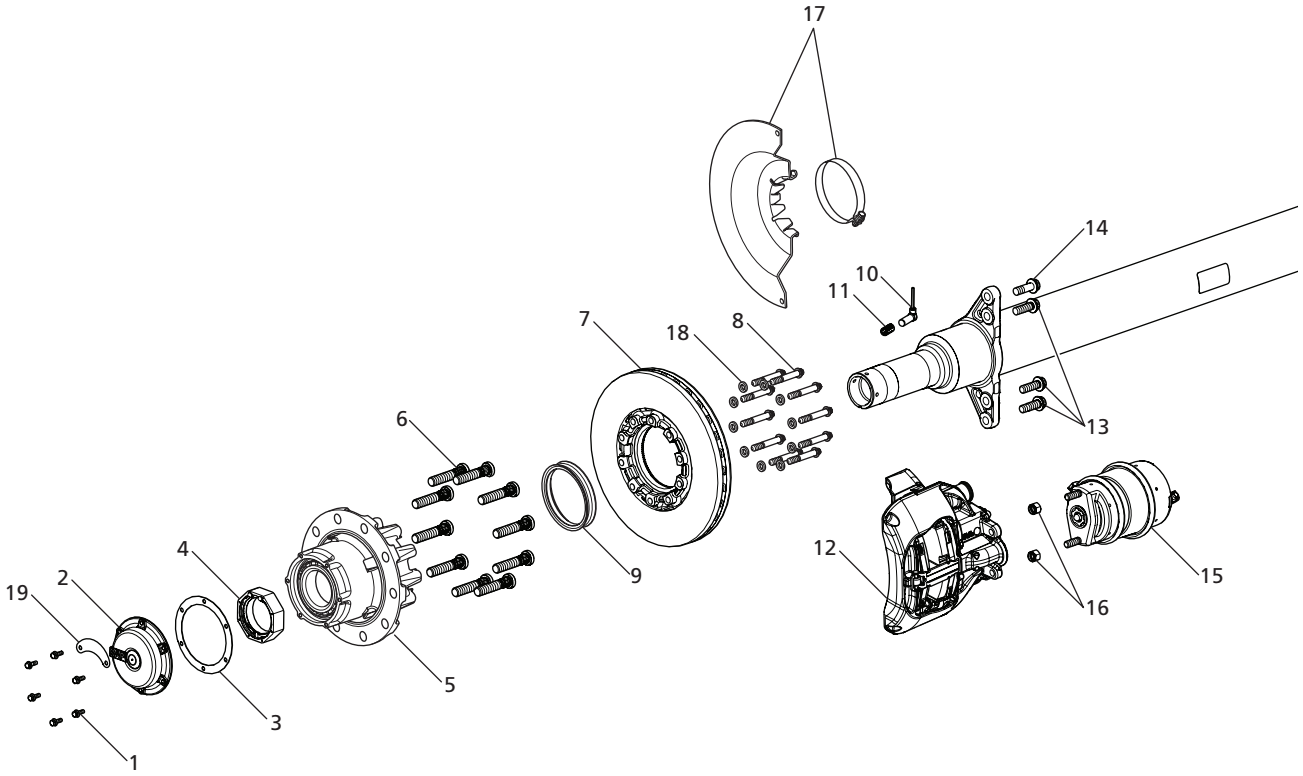

ITEM	DESCRIPTION	QTY. / AXLE
1	Bolt, Hub Cap	12
2	Hub Cap	2
3	Gasket, Hub Cap	2
4	Nut, One Piece Axle	2
5	Hub with Bearings	2
6	Wheel Studs	20
7	Rotor with ABS Tone Ring	2
8	Rotor Attachment Bolts	20
9	Seal, Hub	2
10	ABS Sensor (WABCO)	2

ITEM	DESCRIPTION	QTY. / AXLE
11	Clamping Bush	2
12	Brake Caliper Left-Hand Brake Caliper Right-Hand	1
13	M18 x 1.5" Bolt, Standard	6
14	M18 x 1.5" Bolt, Shoulder	2
15	Brake Chamber	2
16	Brake Chamber nut	4
17	Dust Shield with Clamp (optional)	2
18	Washers	20
19	P89 Identification Tag	1

XL-SA20024UM-en-US Rev G · 2023-09-19 · Amendments and Errors Reserved · © SAF-HOLLAND, Inc., SAF-HOLLAND, HOLLAND, SAF, and logos are trademarks of SAF-HOLLAND S.A., SAF-HOLLAND GmbH, and SAF-HOLLAND, Inc.

5. Caliper Identification and Inspection

SAF P89 axles are equipped with one of three disc brake calipers, SAF-HOLLAND SBS 2220 K0 Calipers, Knorr-Bremse® SK7 calipers, or SAF-HOLLAND SBS 2220 H20 calipers.

5.1 SAF-HOLLAND SBS 2220 K0 Caliper

The SAF-HOLLAND SBS 2220 K0 has a smooth forward face of the caliper and SAF logo on the rear side ***(Figure 3)***.

The inner and outer brake pads for the SBS 2220 K0 are different in shape. The inner brake pad has two "circle X's" on the back side, while the outer brake pad has a relatively smooth back. There is also a notch on the pads to keep them from being installed in the wrong position ***(Figure 4)***.

For instructions on SBS 2220 KO brake caliper inspection and repair, refer to XL-AS20032RM-en-US which can be found at www.safholland.com.

5.2 Knorr-Bremse SK7 Caliper

The Knorr-Bremse SK7 Caliper has a large indentation on the forward face and no SAF logo on the rear of the caliper ***(Figure 5)***.

The brake pads in the SK7 caliper are the same for the inner and outer side of the caliper. The back of the brake pad has the Knorr-Bremse logo and six (6) slots on the back of the brake pad ***(Figure 6)***.

For instructions on SK7 brake caliper inspection and repair, refer to Knorr-Bremse Pneumatic Disc Brake SN6-SN7-SK7 Service Manual Y006471 which can be found at www.knorr-bremsecvs.com/en/.

Figure 3

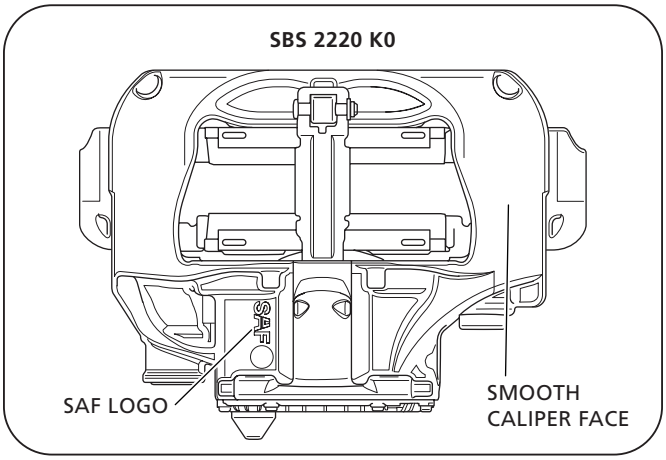

Figure 4

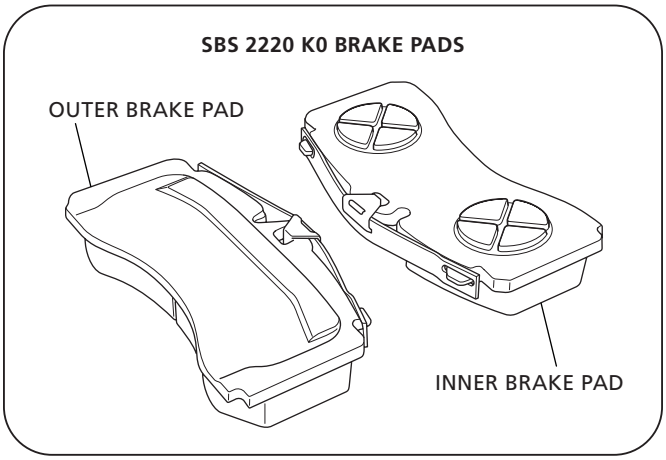

Figure 5

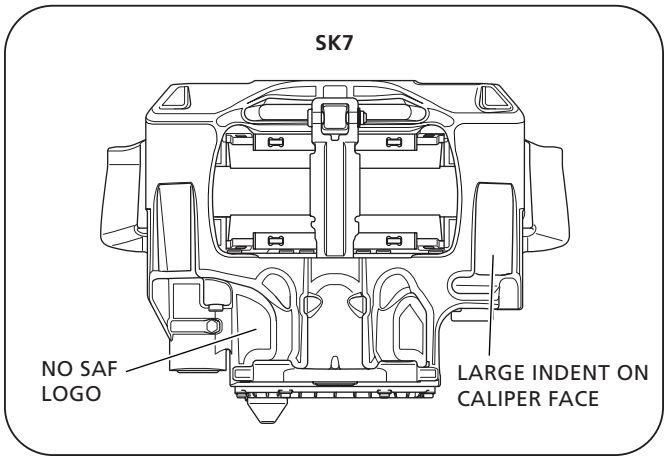

Figure 6

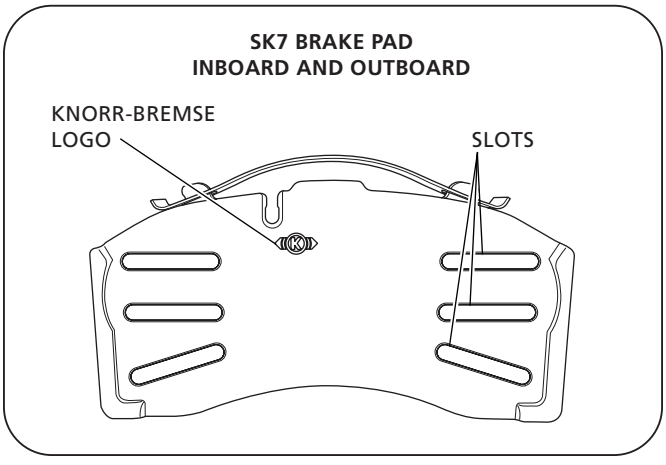

5.3 SAF-HOLLAND SBS 2220 H20 Caliper

The SAF-HOLLAND SBS 2220 H20 caliper has an SAF logo on the rear side ***(Figure 7)***. The calipers brake pad retainer bar is held in place by a spring clip similar to the brake pads (it has no pins or bolts).

The brake pads in the SBS 2220 H20 caliper are the same for the inner and outer side of the caliper. The back of the brake pad has the SAF logo and two (2) indentations on the back of the pad that align with the caliper piston locators ***(Figure 8)***.

For instructions on SBS 2220 H20 brake caliper inspection and repair, refer to XL-SA20057RM-en-US which can be found at www.safholland.com.

Figure 7

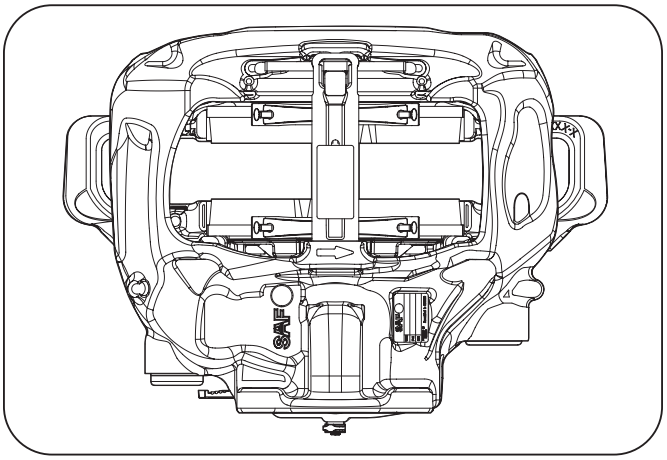

Figure 8



XL-SA20024UM-en-US Rev G · 2023-09-19 · Amendments and Errors Reserved · © SAF-HOLLAND, Inc., SAF-HOLLAND, HOLLAND, SAF, and logos are trademarks of SAF-HOLLAND S.A., SAF-HOLLAND GmbH, and SAF-HOLLAND, Inc.

6. Disc Brake Inspection

IMPORTANT: During removal inspect components for wear and replace worn components.

⚠WARNING Failure to properly support axle during maintenance could allow axle to fall which, if not avoided, could result in death or serious injury.

NOTE: For further disc brake inspection information, refer to the latest version of the TMC recommended practice RP 652–Service and Inspection of Air Disc Brakes.

6.1 Brake Caliper Inspection

The SAF-HOLLAND P89 Plus disc brake is equipped with an SAF-HOLLAND SBS 2220 KO caliper. For instructions on SBS 2220 KO caliper inspection and repair, refer to XL-AS20032RM-en-US which can be found at www.safholland.com.

The inner and outer brake pads for the SBS 2220 KO are different in shape. The inner brake pad has two "circle X's" on the back side, while the outer brake pad has a relatively smooth back. There is also a notch on the pads to keep them from being installed in the wrong position ***(Figure 9)***.

6.2 Pad Wear Inspection

Check the brake pads for proper thickness at regular service intervals based on vehicle usage. Brake pad inspections should be carried out at least every three (3) months and in accordance with any legal requirements. Refer to "Routine Service Schedule" in Section 13.

NOTE: Regular service intervals could be required more frequently for severe duty applications. Refer to Section 13.

A quick visual inspection of the condition of the brake pads can be performed without removing the wheel:

1. Compare the position of the caliper marking to the carrier marking located on the underside of the caliper unit ***(Figure 10)***.
   a. ***Figure 10*** - "View A" shows the positions of the two (2) markings when the brake pads are in good condition.
   b. ***Figure 10*** - "View B" shows the positions of the two (2) markings when the wheel MUST be removed for further inspection of wear to the brake pads and brake rotor.

Figure 9

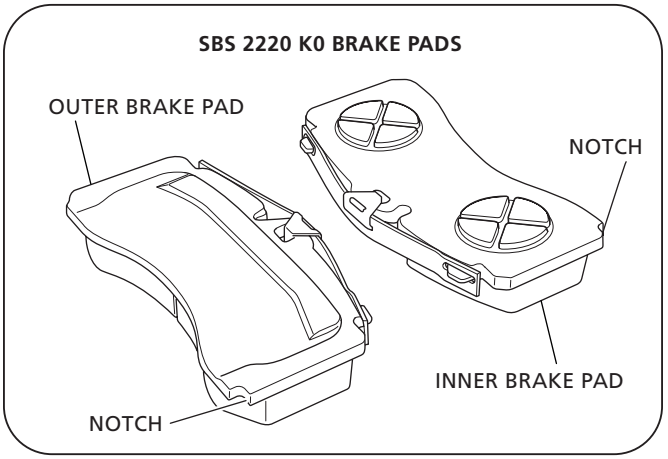

Figure 10

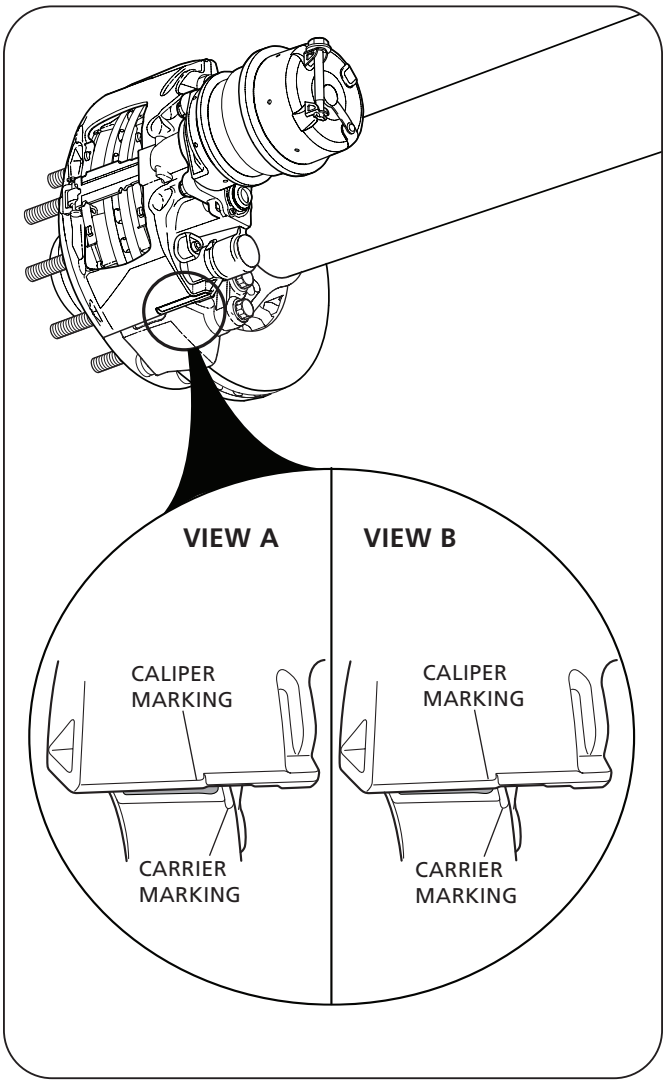

For further inspection of the brake pads, the wheel and brake pads MUST be removed. Refer to XL-AS20032RM-en-US, which can be found at www.safholland.com.

IMPORTANT: After inspecting the brake pads, check that the brake system is functioning properly.

IMPORTANT: When replacing worn brake pads, ALL pads on the axle MUST be replaced.

If the friction material of the brake pad is less than 0.080" (2 mm) at its thinnest area, the brake pad MUST be replaced ***(Figure 11)***.

NOTE: Minor breakouts at the edges are permitted; major breakouts on the surface of the brake pad are NOT permitted ***(Figure 12)***.

6.3 Rotor Wear Inspection

1. Carefully inspect both sides of the brake rotor friction surface ***(Figure 13).***
   a. Spider web cracking is acceptable ***(Area A)***.
   b. Radial cracks less than 0.06" (1.5 mm) deep or wide and their length is less than 75% of the width of the rotor friction surface are acceptable***(Area B)***.
   c. Grooves in the rotor surface are acceptable only if they are less than 0.06" (1.5 mm) deep ***(Area C)***.
   d. Cracks that run completely to either edge of the hub are NOT acceptable, regardless of depth ***(Area D)***.
2. Measure the brake rotor thickness and re-surface, if necessary. For proper brake function, the minimum thickness for re-surfacing the brake rotor is defined as 1.54-1.57" (39-40 mm).

⚠WARNING Re-surfacing the brake rotor beyond the minimum thickness could cause component failure which, if not avoided, could result in death or serious injury.

IMPORTANT: DO NOT use high-pressure cleaners or liquid cleaners on the brake rotor.

If the overall wear limits for the brake rotor and brake pads are exceeded ***(Figure 11)***, the rotor and pads MUST be replaced. Refer to brake pad and rotor replacement instructions as detailed in Sections 8.1 and 8.4 respectively.

For both the inner and outer pads, the maximum brake pad wear difference is 0.2" (5.0 mm).

⚠WARNING Failure to replace brake rotor and pads when minimum wear limits are reached could cause component failure which, if not avoided, could result in death or serious injury.

Figure 11

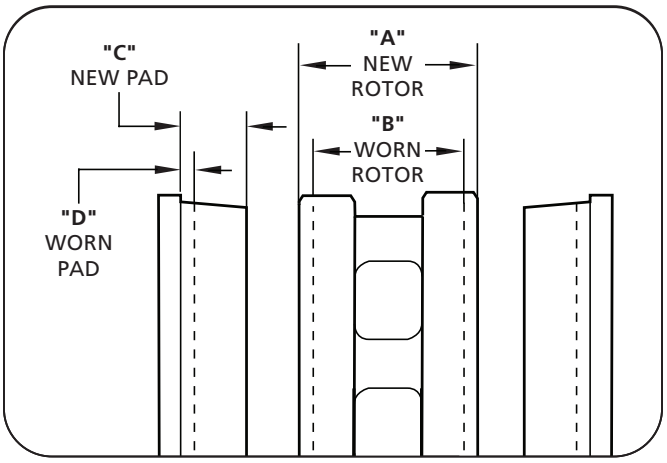

Figure 12

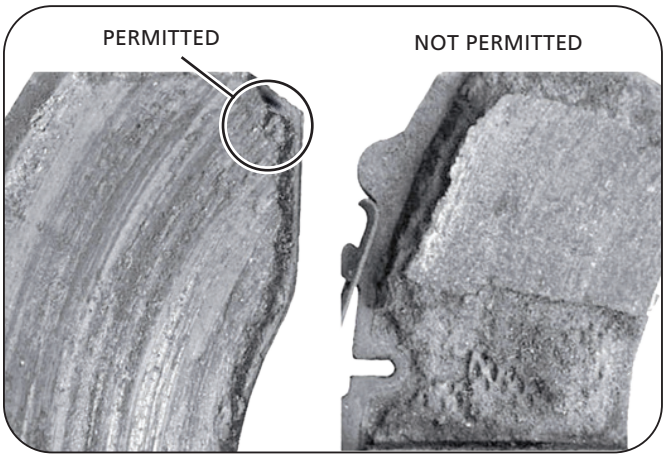

XL-SA20024UM-en-US Rev G · 2023-09-19 · Amendments and Errors Reserved · © SAF-HOLLAND, Inc., SAF-HOLLAND, HOLLAND, SAF, and logos are trademarks of SAF-HOLLAND S.A., SAF-HOLLAND GmbH, and SAF-HOLLAND, Inc.

BRAKE ROTOR			BRAKE PAD	
DIAMETER	"A" NEW	"B" WEAR LIMIT	"C" NEW	"D" WEAR LIMIT
430 mm	45 mm	37 mm	23 mm	2 mm
16.93"	1.77"	1.46"	0.9"	0.080"

NOTE: When replacing the brake pads or brake rotor, use only Original SAF-HOLLAND rotors and approved brake pads.

IMPORTANT: When replacing worn brake pads, all pads on the axle MUST be replaced.

7 Hub Unit Inspection

The SAF-HOLLAND P89 Plus disc brake hub unit with a precision bearing system is designed to be maintenance-free. If there is a malfunction with the hub unit, the hub unit including a precision bearing system MUST be replaced. The precision bearing system is sealed and requires no additional grease or oil application to the bearing.

IMPORTANT: DO NOT remove the precision bearing system. If there is a malfunction, the bearing system and hub unit MUST be replaced.

1. When changing brake pads and rotors or in the event of damage (e.g. brake overheating), inspect the bearing for signs of wear and grease leakage. Perform the wheel end play and wheel bearing noise test as described in Sections 7.1 and 7.2.

⚠WARNING Failure to replace bearing system and hub unit when required could cause component failure which, if not avoided, could result in death or serious injury.

2. Visually check the seal system to ensure that it is functioning properly and that there is minimal grease leakage.

NOTE: Adjustment of the precision bearing system is NOT necessary.

IMPORTANT: DO NOT use high-pressure cleaners or liquid cleaners on the hub unit.

Figure 13

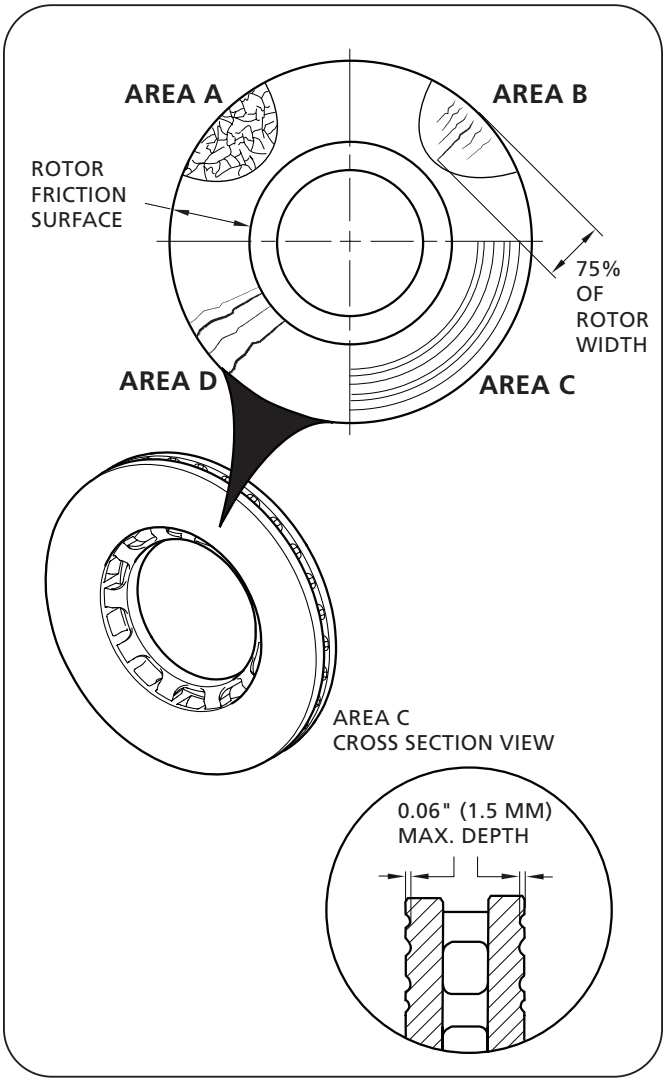

7.1 Wheel End Play Check

1. For sufficient clearance to perform the test, raise the wheel off the ground. DO NOT remove the wheel.
2. With a 1/2" socket, remove the six (6) hub cap bolts and the hub cap ***(Figure 14)***.
3. Utilizing a screwdriver, carefully pry the orange keeper arm from the undercut groove on each side of the one piece axle nut until the keeper is released from it ***(Figure 15)***.
4. Using a standard 4-13/16" P-Spindle wheel nut socket, check the torque of the axle nut to ensure that it is torqued to 500 ft-lbs (680 N•m) by rotating the nut in a clockwise direction ***(Figure 15)***.
5. Re-install the orange keeper arm.

NOTE: All axle nuts on SAF-HOLLAND INTEGRAL P89 Disc Brake Axles are right-hand threaded.

6. Clean the face of the spindle. Attach the magnetic foot of the dial gauge to the surface of the nut and spindle. Place the pointer on the rim surface as illustrated ***(Figure 16)***.
7. Grasp the wheel assembly at the three o'clock and nine o'clock positions. Oscillate the hub a maximum of five degrees several times while pushing inward on the hub. Zero the dial indicator. Oscillate the hub a maximum of five degrees several times while pulling outward on the hub, record the end play shown on the dial gauge ***(Figure 16)***.

NOTE: Rotate the wheel several times before each measurement.

NOTE: If a recorded wheel end play of more than .005" (0.127 mm) while alternating ± 50 lbs (220 N) forces is measured, the hub unit MUST be replaced.

Figure 14

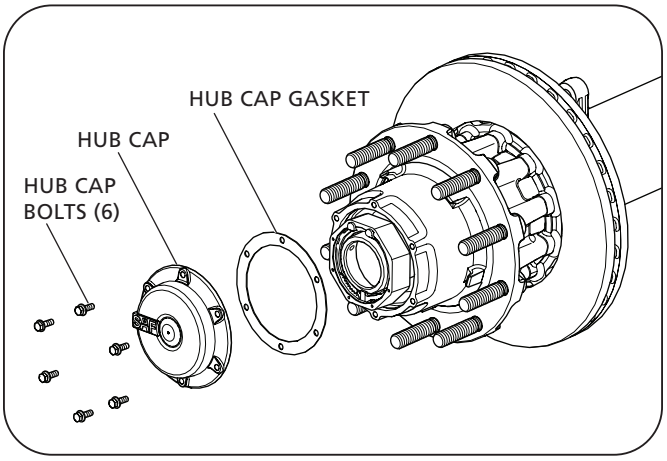

Figure 15

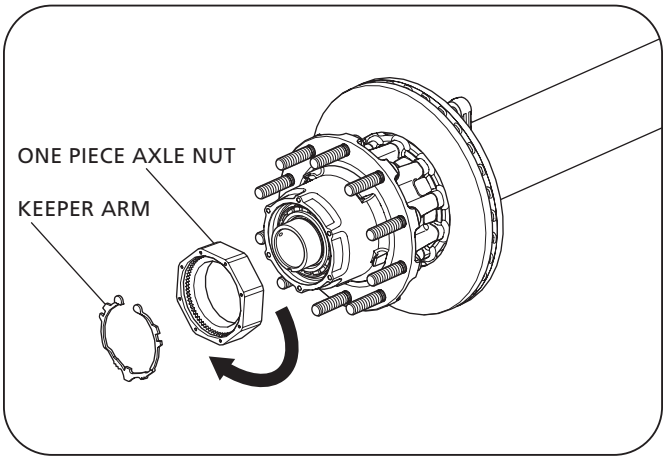

Figure 16

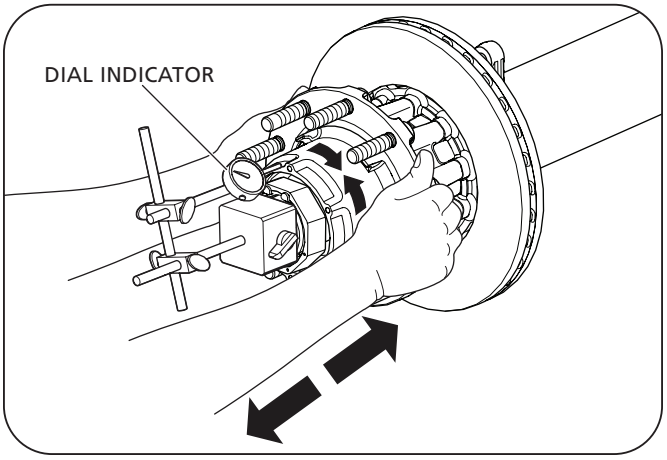

XL-SA20024UM-en-US Rev G · 2023-09-19 · Amendments and Errors Reserved · © SAF-HOLLAND, Inc., SAF-HOLLAND, HOLLAND, SAF, and logos are trademarks of SAF-HOLLAND S.A., SAF-HOLLAND GmbH, and SAF-HOLLAND, Inc.

7.2 Wheel Bearing Noise Test

1. For sufficient clearance to perform the test, raise the wheel off the ground. DO NOT remove the wheel.
2. With a 1/2" socket, remove the six (6) hub cap bolts and the hub cap ***(Figure 17)***.
3. Utilizing a screwdriver, carefully pry the orange keeper arm from the undercut groove on each side of the one piece axle nut until the keeper is released from it ***(Figure 18)***.
4. Using a standard 4-13/16" P-Spindle wheel nut socket, check the torque of the axle nut to ensure that it is torqued to 500 ft-lbs (680 N•m) by rotating the nut in a clockwise direction. Re-install the orange keeper arm ***(Figure 18)***.

NOTE: All axle nuts on SAF-HOLLAND INTEGRAL P89 Disc Brake Axles are right-hand threaded.

5. Rotate the wheel in both forward and rearward directions, using varying speeds ***(Figure 19)***.
6. If the bearing feels rough and/or a "grinding" noise is heard, the hub MUST be replaced.

NOTE: Noises can also be caused by the brakes. Before removing the hub unit, remove the brake pads and repeat the bearing noise test.

Figure 17

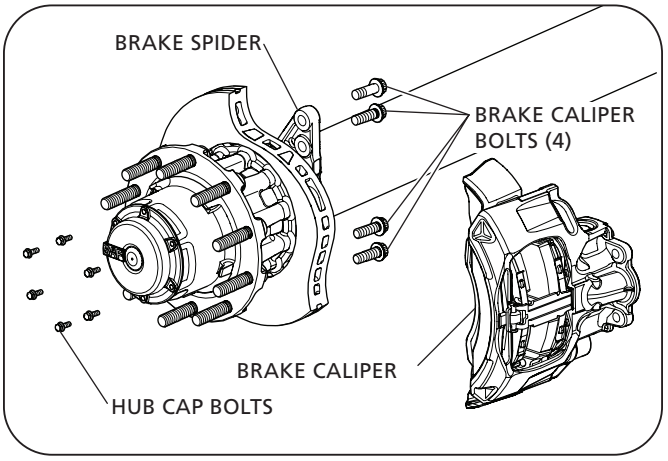

Figure 18

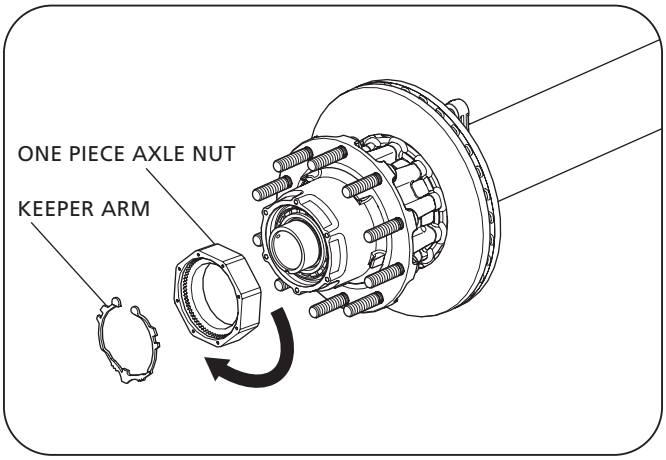

Figure 19

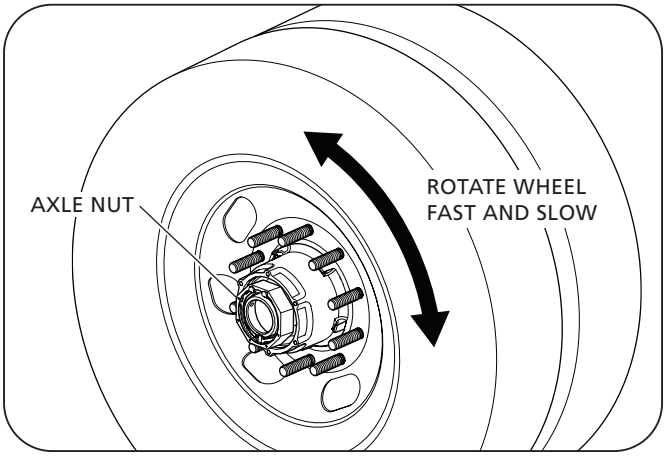

7.3 Hub Unit Grease Seepage

1. The P89 Plus bearing package is designed to allow for some seepage/leakage of grease from the sealed cartridge bearing. This is a result of the hydraulic action of the bearing working the grease. The following figures ***(Figures 20 through 25)*** will describe typical seepage you may see.
2. The grease on the face of the bearing will appear black in color. This is normal and a result of the grease getting properly worked in the bearing.
3. During the initial break in period a small amount of clear/opaque grease may be visible. This is normal and does not indicate a leak.
4. If you have questions about this criteria you may contact your local Field Service Rep or SAF-HOLLAND Warranty at 800-396-6501.

Examples of Bearing Seepage

Figure 20



Figure 21



Figure 22



Figure 23

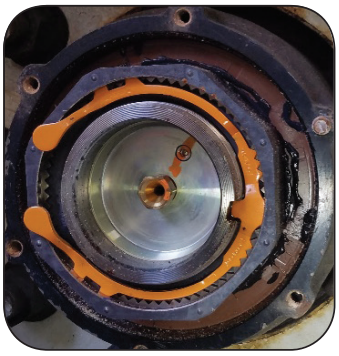

Figure 24



Figure 25

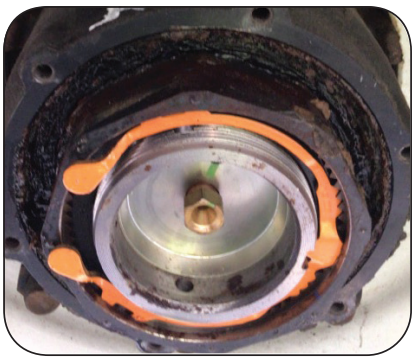

XL-SA20024UM-en-US Rev G · 2023-09-19 · Amendments and Errors Reserved · © SAF-HOLLAND, Inc., SAF-HOLLAND, HOLLAND, SAF, and logos are trademarks of SAF-HOLLAND S.A., SAF-HOLLAND GmbH, and SAF-HOLLAND, Inc.

8. Disc Brake/Hub Unit Service

Contact SAF-HOLLAND Customer Service at 888-396-6501 before performing any work on the SAF-HOLLAND INTEGRAL disc brake hub unit.

IMPORTANT: Only qualified mechanics should perform the procedures detailed in this manual.

IMPORTANT: During removal inspect components for wear and replace worn components.

⚠WARNING Failure to properly support axle during maintenance could allow axle to fall which, if not avoided, could result in death or serious injury.

⚠CAUTION DO NOT hit steel parts with a steel hammer as parts could break, sending flying steel fragments in any direction creating a hazard which, if not avoided, could result in minor to moderate injury.

NOTE: For certain service and repair work, some bolts MUST be replaced. DO NOT oil or grease bolts for installation. Tighten bolts with a torque wrench following the specified procedure and torque value. Refer to Torque Chart in Section 12.

8.1 Brake Pad Replacement

For instructions on brake replacement, refer to SAF-HOLLAND manual XL-AS20032RM-en-US, which can be found at www.safholland.com.

IMPORTANT: After inspecting the brake pads, check that the brake system is functioning properly.

IMPORTANT: When replacing worn brake pads, all pads on the axle MUST be replaced.

8.2 Head Unit Removal

⚠WARNING Failure to observe these instructions could cause component failure which, if not avoided, could result in death or serious injury.

1. Cage the spring brake.
2. Remove the ABS sensor by following the instructions detailed in Section 11.1.
3. Remove the brake chamber from the brake caliper by loosening and removing the two (2) mounting nuts ***(Figure 26)***.

Figure 26

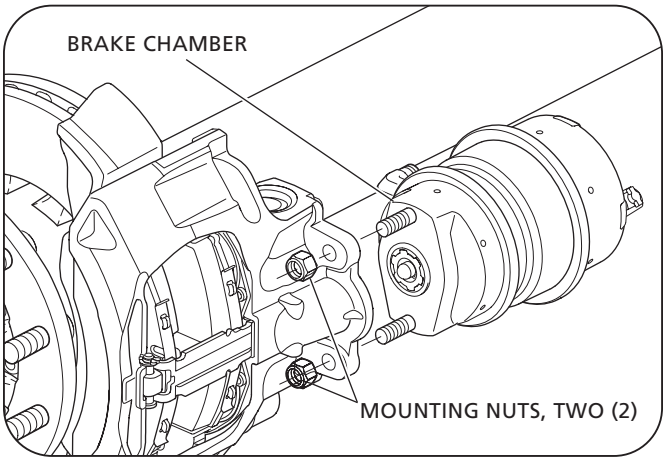

4. Remove the brake caliper from the brake spider by using a size 24 mm socket to loosen and discard all four (4) brake caliper bolts ***(Figure 27)***.
5. With a 1/2" socket, remove the six (6) hub cap bolts and the hub cap ***(Figure 27)***.
6. Utilizing a screwdriver, carefully pry the orange keeper arm from the undercut groove on each side of the one piece axle nut until the keeper is released from it ***(Figure 28)***.
7. Using a standard 4-13/16" P-Spindle wheel nut socket, remove the spindle nut by rotating it in a counter-clockwise direction ***(Figure 28)***.
8. Remove the head unit by gently sliding it off the spindle. ***(Figure 29).***
9. Remove the bearing spindle seal from the spindle and discard ***(Figure 30).***

NOTE: The spindle seal may be stuck to the bearing system or on the axle spindle.

8.3 Wheel Bolt Replacement

The SAF-HOLLAND disc brake hub unit with precision bearing system is designed to be maintenance-free. If there is a malfunction with the hub unit, the hub unit including the precision bearing system MUST be replaced. The integrated precision bearing system is lifetime sealed and requires no grease or oil application to the bearing.

IMPORTANT: DO NOT remove the integrated precision bearing system. If there is a malfunction, the bearing system and hub unit MUST be replaced.

When replacing the wheel bolts, refer to the head unit removal instructions described in Section 8.2

NOTE: Not all bolts may need to be replaced. Only replace bolts that are damaged or in need of replacement.

Figure 27

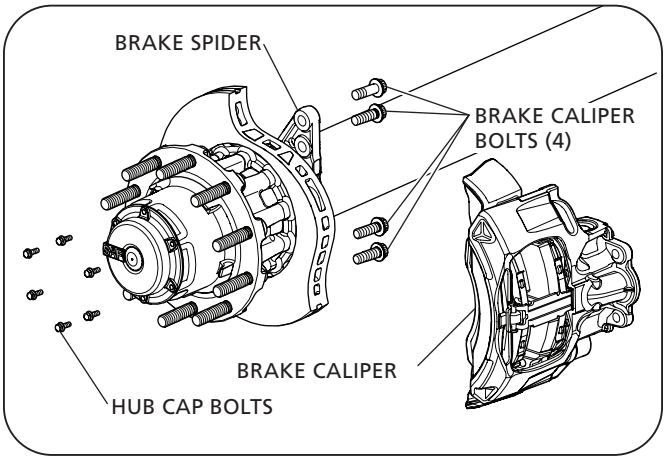

Figure 28

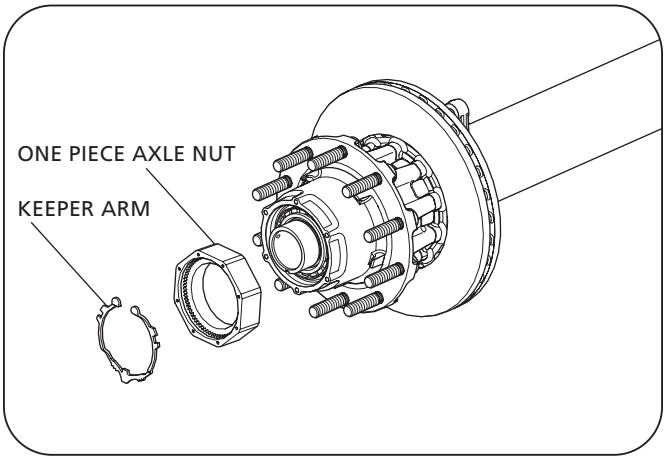

Figure 29

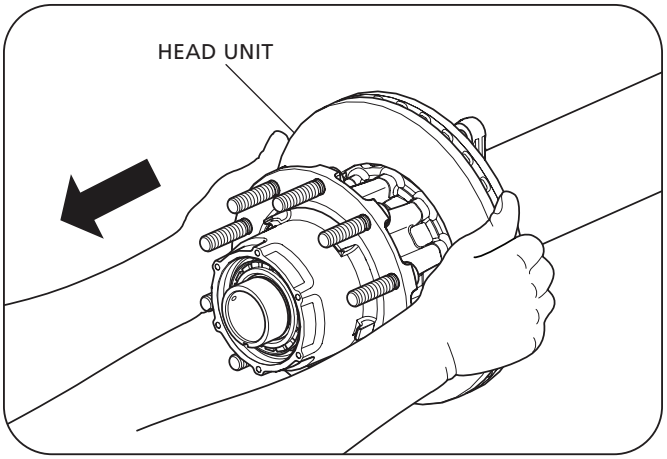

Figure 30

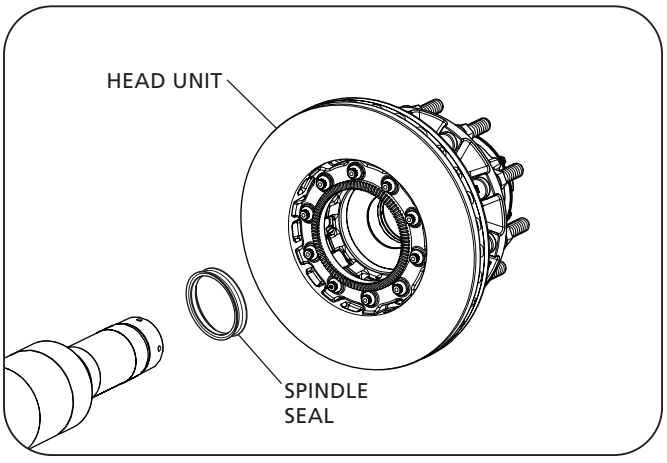

XL-SA20024UM-en-US Rev G · 2023-09-19 · Amendments and Errors Reserved · © SAF-HOLLAND, Inc., SAF-HOLLAND, HOLLAND, SAF, and logos are trademarks of SAF-HOLLAND S.A., SAF-HOLLAND GmbH, and SAF-HOLLAND, Inc.

1. Remove the wheel bolts by pressing them out of the hub unit and discard ***(Figure 31).***
2. Install new wheel bolts by pressing them into the hub unit. To ensure correct alignment of the bolts during installation, position the flat side of each wheel bolt head so that it is facing the center of the hub ***(Figure 32)***.

CAUTION DO NOT hit steel parts with a steel hammer as parts could break, sending flying steel fragments in any direction creating a hazard which, if not avoided, could result in minor to moderate injury.

8.4 Rotor Replacement

1. Remove the hub unit from the rotor by using a size 15 mm socket to loosen and discard all ten (10) connection bolts ***(Figure 33).***
2. Clean the rotor contact surface on the hub. Using compressed air, clean the tapped holes in the hub. Check to make sure the threads are undamaged.
3. Attach the new rotor to the hub using ten (10) new SAF specific INTEGRAL bolts and washers ***(Figure 33)***. Using a torque wrench, pre-torque the bolts to 40 ft.-lbs. (54 N•m). For final torque, tighten the bolts to 140 ft.-lbs. (190 N•m) using a crisscross pattern. Refer to the Torque Chart in Section 12 for more information.

IMPORTANT: When attaching a new rotor to the head unit, use only new SAF specified connection bolts. Bolts MUST be clean and free from oil and grease.

⚠WARNING Failure to use only SAF specified connection bolts could cause component failure which, if not avoided, could result in death or serious injury.

CAUTION When installing new washers, the attachment bolts can interfere with the ABS sensor block. Ensure that there is clearance provided for ABS Sensor Block ***(Figure 38)***. Failure to provide clearance can cause damage to property. Refer to service bulletin XL-SA20031SB-en-US.

Figure 31

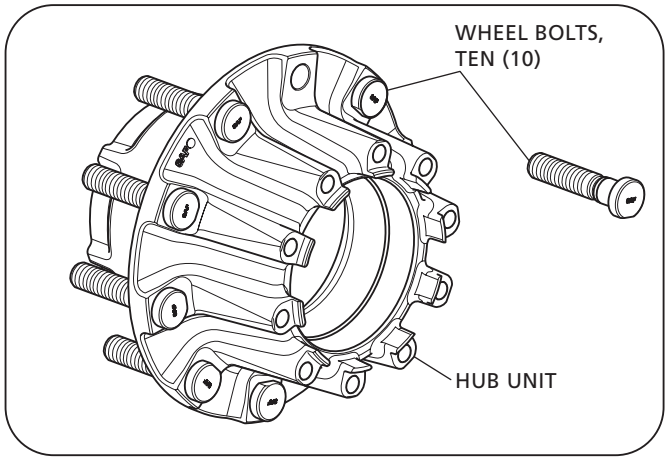

Figure 32

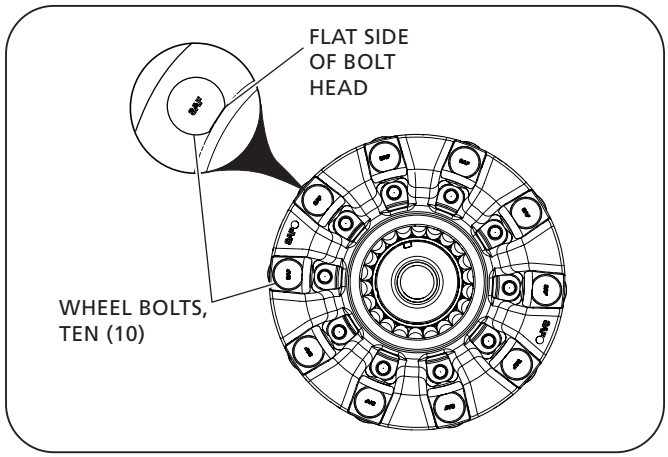

Figure 33

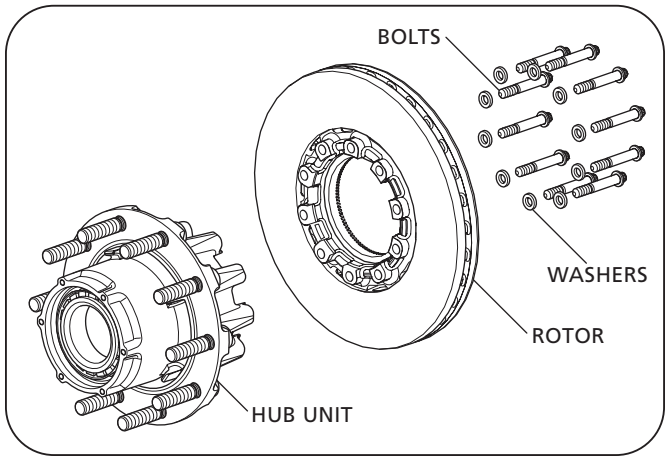

8.5 Head Unit Installation

1. Clean any grease residues from the axle spindle end and re-coat the bearing journal with SAF-HOLLAND fitting paste 05387004203. DO NOT grease or oil the spindle threads.

NOTE: SAF-HOLLAND fitting paste 05387004203 is available in 5 g packets through SAF-HOLLAND Original Parts online at www.safholland.us or by contacting Customer Service at 888-396-6501.

IMPORTANT: DO NOT use high-pressure cleaners or liquid cleaners on the spindle.

2. Coat a new spindle seal with SAF-HOLLAND fitting paste 05387004203 and slide it onto the spindle ***(Figure 34 and 35)***.
3. Re-install the head unit by gently sliding it on the spindle ***(Figure 34)***. Take care to orient the seal correctly ***(Figure 35)***.
4. Using a screwdriver, carefully pry the orange keeper arm from the undercut groove on the side until the keeper is released from the one piece wheel nut ***(Figure 36)***.
5. Install the wheel nut onto the spindle threads ***(Figure 36)***.
6. Using a standard 4-13/16" P-Spindle wheel nut socket, torque the spindle nut to 500 ft-lbs (680 N•m) while rotating the hub. DO NOT back off the spindle nut ***(Figure 36)***.
7. With the bent legs (orange side) of the keeper facing outward, insert the keeper tab into the undercut groove of the nut and engage the keyway tang in the axle keyway.
8. Engage the mating teeth ***(Figure 37)***.
9. Compress and insert the keeper arms, one at a time, into the undercut groove with a screwdriver.
10. If the keeper teeth do not line up with the teeth in the nut, tighten the nut slightly until they engage. DO NOT loosen the nut to align the teeth.

CAUTION Failure to follow the instruction could cause the wheel to come off and cause bodily injury. Make sure that the keeper tab and keeper arms are fully seated into the undercut groove. Inspect keyway tang to insure it does not contact the bottom of the keyway. If contact exists, immediately notify your once piece axle nut representative.

11. Using a dial indicator, verify that end play reading is no greater than .001" (0.03 mm), refer to Steps 6 and 7 of Section 7.1.

Figure 34

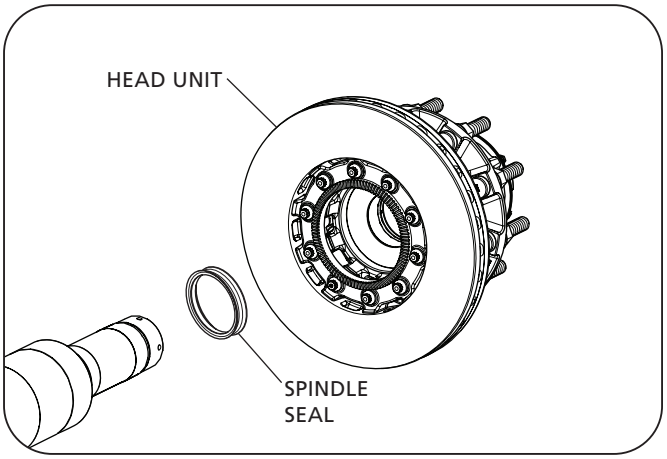

Figure 35

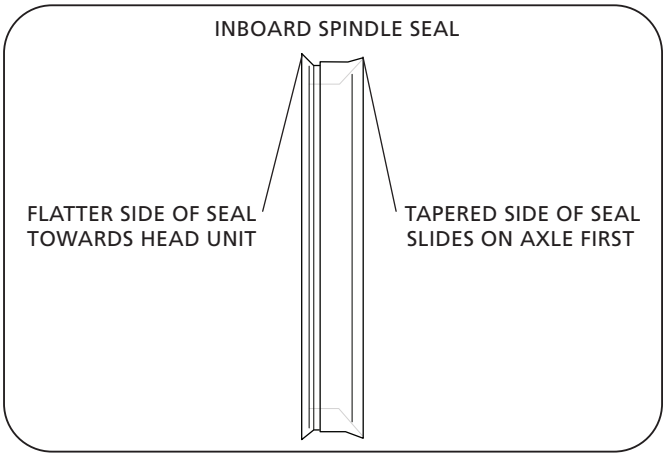

Figure 36

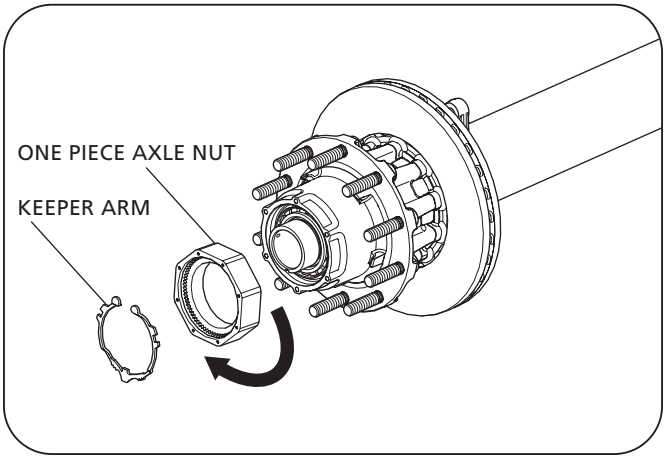

XL-SA20024UM-en-US Rev G · 2023-09-19 · Amendments and Errors Reserved · © SAF-HOLLAND, Inc., SAF-HOLLAND, HOLLAND, SAF, and logos are trademarks of SAF-HOLLAND S.A., SAF-HOLLAND GmbH, and SAF-HOLLAND, Inc.

12. Make sure that the keeper tab and keeper arms are fully seated into the undercut groove. Inspect the keyway tang to ensure it does not contact the bottom of the keyway ***(Figure 37)***. If contact exists, immediately notify your SAF-HOLLAND Service Representative.

⚠WARNING Failure to ensure that the keeper is properly installed could cause wheel separation which, if not avoided, could result in death or serious injury.

13. ABS sensor block must clear rotor attachment bolts.

CAUTION When installing new washers, the attachment bolts can interfere with the ABS sensor block. Ensure that there is clearance provided for ABS Sensor Block ***(Figure 38)***. Failure to provide clearance can cause damage to property. Refer to service bulletin XL-SA20031SB-en-US for ABS Sensor Block Modification Procedure.

14. Install the hub cap and P89 Plus identification tag, making sure the hub cap gasket is in place ***(Figure 39)***.

IMPORTANT: When installing hub cap, make sure the hub cap gasket is not bent or damaged.

IMPORTANT: DO NOT over torque. This can crush the hub cap gasket.

CAUTION Failure to avoid damaging the hub cap gasket could allow lubricant to leak which, if not avoided, could result in bearing failure.

15. Install the six (6) bolts to secure the hub cap assembly ***(Figure 39)***. Tighten bolts to 12-16 ft-lbs (16 N•m).

Figure 37

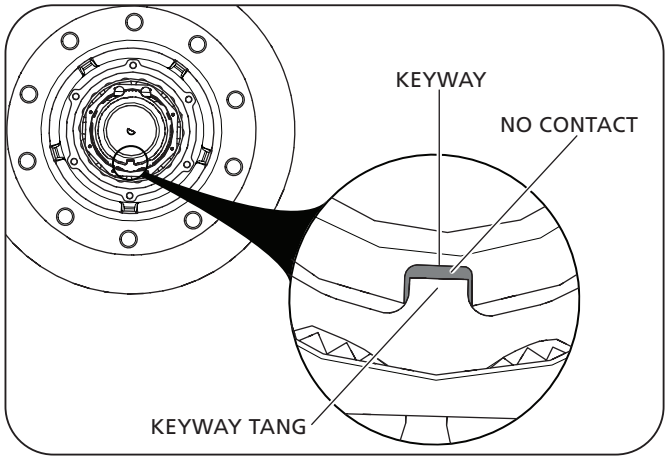

Figure 38

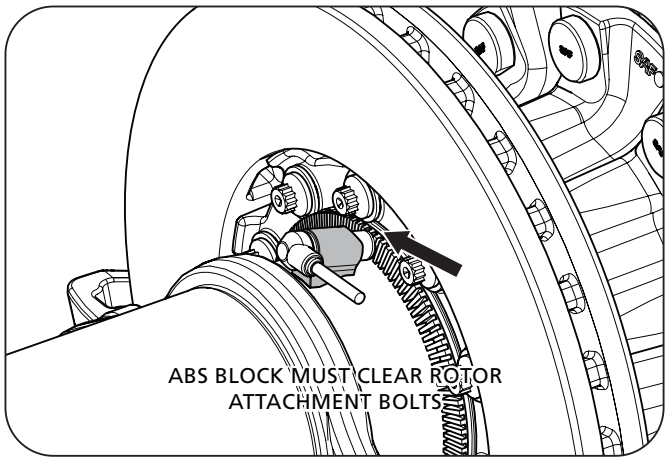

Figure 39

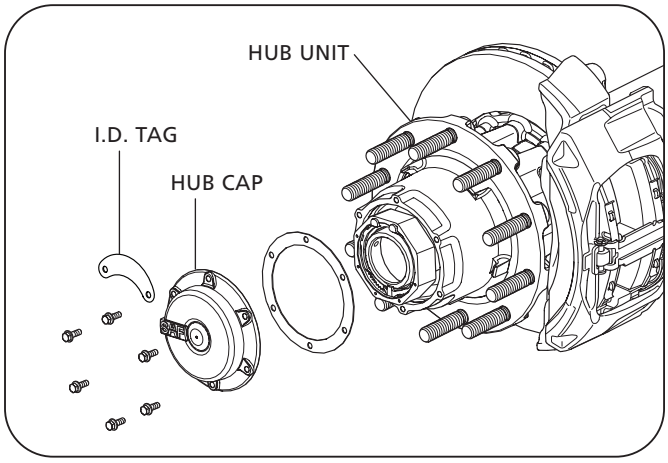

8.6 Caliper Installation

1. Re-install the caliper onto the brake spider using four (4) new SAF specific brake caliper bolts ***(Figure 40):***
   a. Pre-torque the bolts to 88 ft.-lbs. (120 N•m) starting with the shoulder bolt and work across the spider using a size 24 mm socket.
   b. Verify the pre-torque of the bolts a second time, and if necessary re-tighten all bolts to 88 ft.-lbs. (120 N•m).
   c. Final torque to 331 ± 22 ft.-lbs. (450 ± 30 N•m), starting with the shoulder bolt and work across the spider.

NOTE: The caliper is connected to the disc brake spider using four (4) SAF specific bolts: three (3) standard bolts and one (1) shoulder bolt ***(Figure 40).*** The shoulder bolt is located at the outer mounting hole where the brake rotor rotates OUT of the caliper when turning in driving direction.

IMPORTANT: Make sure that the brake caliper is mounted on the correct side of the axle. The correct position can be identified by the lengths of the guide pins on the caliper unit. The longer guide pins should be positioned on the bottom of the caliper unit when installed rearward of the axle and on top when forward of the axle ***(Figures 41 and 42).***

CAUTION Failure to install the shoulder bolt in the proper location could result in component damage.

2. Re-install the SAF brake chamber by following the instructions in SAF Brake Chambers Installation and Service Guide XL-SA10062IM-en-US available on the internet at www.safholland.us.
3. Re-install the ABS sensor by following the instructions detailed in Section 11.1.
4. To enable the ABS sensor to function properly press the ABS sensor against the ABS toner ring at the hub unit to eliminate any clearance between these parts.

IMPORTANT: After replacing the caliper, verify that the brake system is functioning properly.

9. Brake Caliper Servicing

For instructions on brake caliper and repair/replacement, refer to the SAF-HOLLAND XL-AS20032RM-en-US, which can be found at www.safholland.com.

Figure 40

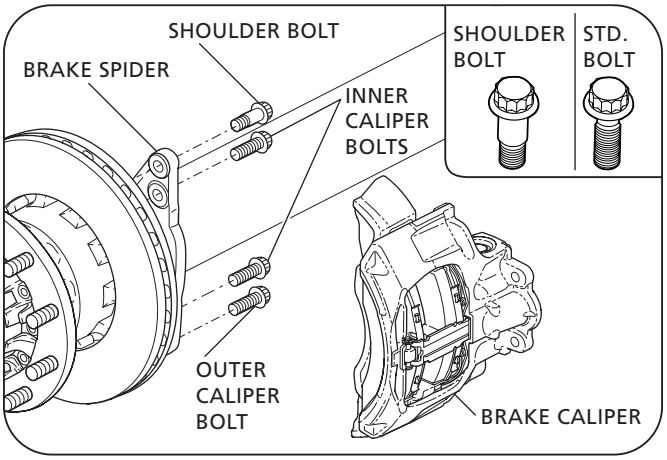

Figure 41

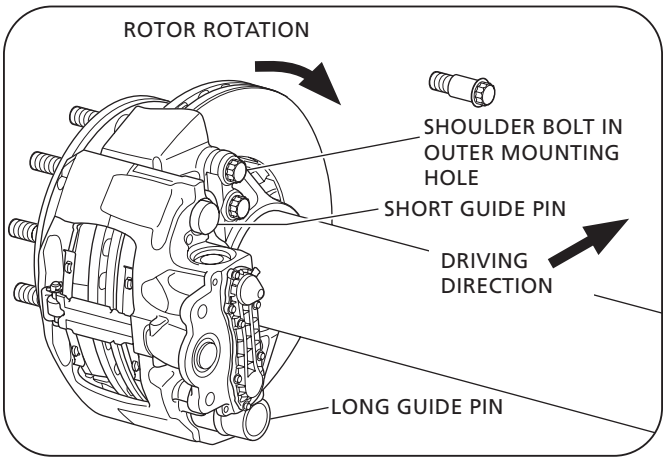

Figure 42

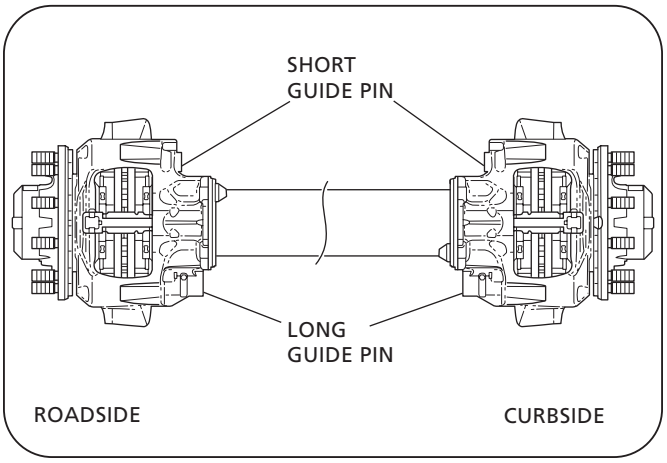

XL-SA20024UM-en-US Rev G · 2023-09-19 · Amendments and Errors Reserved · © SAF-HOLLAND, Inc., SAF-HOLLAND, HOLLAND, SAF, and logos are trademarks of SAF-HOLLAND S.A., SAF-HOLLAND GmbH, and SAF-HOLLAND, Inc.

10. Wheel Installation Procedure

The following information is intended to provide basic wheel installation instructions. Refer to TMC RP222C for complete installation details.

1. Clean all mating surfaces on hub, wheels and nuts.
2. Rotate the hub so a pilot boss is at the top (12 o'clock) position ***(Figure 43)***.
3. Mount wheel(s) on hub. One or more of the wheel nuts can be started in order to hold wheel in position.
4. Tighten the top wheel nut first. Apply 50 ft-lbs (68 N•m) of torque to draw the wheel up fully against the hub.
5. Install remaining wheel nuts. Using sequence shown in ***(Figure 43)***, tighten all wheel nuts to 50 ft-lbs (68 N•m) of torque.
6. Repeating sequence shown in ***(Figure 43)***, retighten all wheel nuts to 475 ± 25 ft. lbs. (644 ± 34 N•m) of torque.
7. Check seating of wheel at the pilot bosses. Rotate wheel and check for any rotational irregularity.

⚠WARNING Re-torque all wheel nuts after 5 to 100 miles of service on the initial "in-service" following any installation of wheel to hub assembly.

11. Optional Equipment

11.1 ABS Sensor Replacement

1. Disconnect the ABS sensor.
2. Remove the ABS sensor from the sensor holder by pulling it straight out from the holder and discard ***(Figure 44).***
3. If necessary, remove the sensor retaining spring clip from the sensor holder and replace with new clip. ***(Figure 44).***
4. Install a new ABS sensor by pushing it directly into the sensor holder/spring clip until it contacts the tooth wheel in the hub unit ***(Figure 44).***

NOTE: Some models will have a dual ABS sensor Block ***(Figure 45)***. Be sure to use the angled hole for ABS sensor.

5. Re-connect the ABS sensor.

11.2 Hubodometer

The SAF-HOLLAND INTEGRAL Disc Brake can be factory equipped or retrofitted with any industry standard hubodometer designed for a parallel spindle axle.

Figure 43

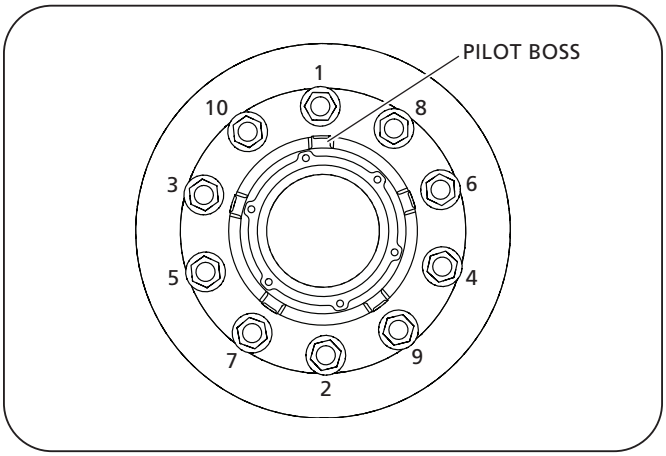

Figure 44

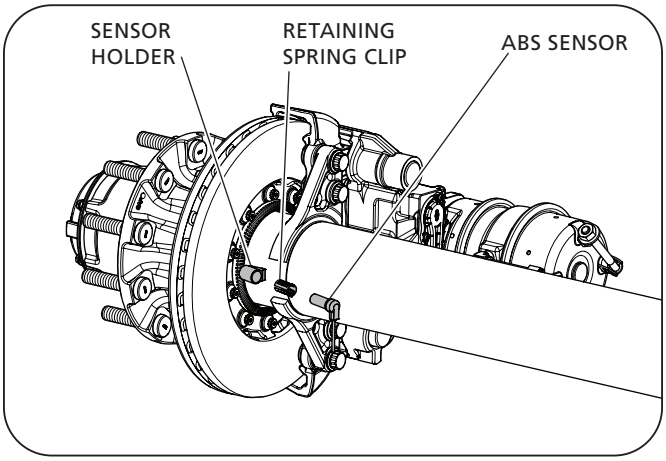

Figure 45

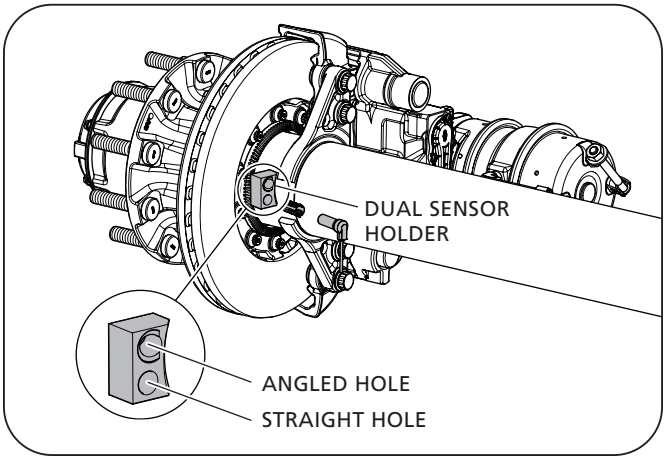

11.3 Tire Inflation System

If your system is prepped for a Tire Inflation System, contact SAF-HOLLAND Customer Service for further information and installation instructions.

11.4 Dust Shield

The SAF-HOLLAND INTEGRAL Disc Brake can be factory equipped or retrofitted with a dust shield.

Refer to ***Figure 46*** for the following instructions:

1. Using a 13 mm socket, loosen and remove the dust shield clamp band bolt.
2. Route any ABS sensor wires through one of the two rubber grommets on the dust shield and position the dust shield on the axle.
3. Wrap the clamp band around the axle and dust shield and loosely install the clamp band bolt.
4. Slide the dust shield and clamp band together toward the disc brake until the clamp band is about 12 mm (0.5") from the brake rotor, pulling the ABS sensor wire through the rubber grommet as necessary.
5. Torque the clamp band bolt to 20-25 ft-lbs (27-34 N•m).
6. Use a pry bar and/or rubber mallet to ensure that there is clearance between the dust shield and the rotor.
7. Plug the ABS sensor into the abs system wire.

Figure 46

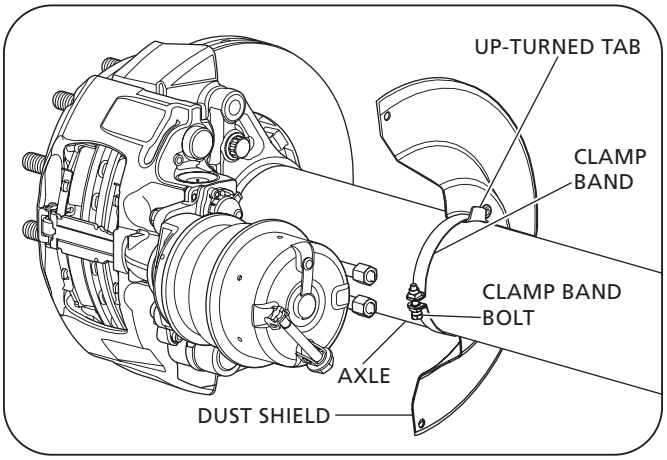

XL-SA20024UM-en-US Rev G · 2023-09-19 · Amendments and Errors Reserved · © SAF-HOLLAND, Inc., SAF-HOLLAND, HOLLAND, SAF, and logos are trademarks of SAF-HOLLAND S.A., SAF-HOLLAND GmbH, and SAF-HOLLAND, Inc.

12. Torque Chart

PART	APPLICATION	TORQUE SPECIFICATIONS
One Piece Axle Nut	Precision Bearing System	1. Using a standard 4-13/16" P-Spindle wheel nut socket, torque the spindle nut to 500 ft-lbs (680 N•m) while rotating the hub. DO NOT back off the spindle nut. 2. With the bent legs (orange side) of the keeper facing outward, insert the keeper tab into the undercut groove of the nut and engage the keyway tang in the axle keyway. 3. Engage the mating teeth. 4. Compress and insert the keeper arms, one at a time, into the undercut groove with a screwdriver. 5. If the keeper teeth do not line up with the teeth in the nut, tighten the nut slightly until they engage. DO NOT loosen the nut to align the teeth.
SAF Specific INTEGRAL Bolt M14 x 1.5	Rotor - Hub	Torque all ten (10) bolts in a criss-cross pattern. 1. Pre-torque to 40 ft-lbs (54 N•m). 2. Final torque tighten 140 ft-lbs (190 N•m).
SAF Specific Caliper Bolt M18 x 1.5	Caliper - Spider	Torque bolts from inner bolts to outer bolts. 1. Pre-torque to 88 ft-lbs (120 N•m). 2. Verify the pre-torque of the bolts a second time, and, if necessary re-tighten all bolts to 88 ft-lbs (120 N•m). 3. Final torque from inner bolts to outer bolts to 331 +/- 22 ft-lbs (450 +/- 30 N•m).
SAF Specific Brake Chamber Nut 5/8"-11 UNC Nylock or M16 x 1.5"	Brake Chamber	1. Pre-torque both chamber nuts to 60-75 ft-lbs (80-100 N•m). 2. For final torque tighten both chamber nuts to 130-155 ft-lbs (180-210 N•m)
Wheel Nuts	Wheel Mounting	1. Torque to 475 ± 25 ft-lbs. (644 ± 34 N•m). Refer to Section 10 Page 21
5/16-18 Bolt	Hub Cap	1. Torque to 12-16 ft.-lbs. (16-22 N•m)
M8 x 1.25 Bolt	Dust Shield Clamp	1. Torque to 20-25 ft.-lbs. (27-34 N•m)

13. Routine Service Schedule

⚠WARNING Failure to inspect and maintain your SAF-HOLLAND INTEGRAL disc brake axle as outlined in Section 12 can result in brake or wheel bearing failure which, if not avoided, could result in death or serious injury.

⚠WARNING Failure to maintain your SAF-HOLLAND INTEGRAL disc brake with SAF-HOLLAND Original Parts can result in brake or wheel bearing failure which, if not avoided, could result in death or serious injury.

IMPORTANT: Use only SAF-HOLLAND Original Parts to service your SAF-HOLLAND INTEGRAL disc brake axle.

WHICHEVER OCCURS FIRST			PERIODIC CHECKS		
	MILEAGE INTERVALS	After First 3,000 Miles	Daily	Every 20,000 Miles	Every 50,000 Miles
	TIME INTERVALS	After First Month		Every 3 Months	Every 6 Months
VISUAL AND SAFETY INSPECTION					
Inspect for missing, or loose hubcap.			■		
Inspect for grease leakage around hubcap.			■		
Hub unit maintenance-free. Check for grease leaks. Refer to Section 7.				■	
Inspect the brake caliper guide system. Check for free movement and sliding action. Refer to Section 9.					■
Check rubber dust covers for cracks and damage. Check adjuster cap for correct seating. Refer to Section 9.					■
Inspect brake pad thickness regularly. Refer to Section 6.2.				■	
Inspect brake rotors for cracks. Refer to Section 6.3.					■
Perform general service / maintenance inspection. Refer to Section 2.		■			
Perform disc brake / hub unit inspection. Refer to Section 7.		■			■
Perform wheel end play and wheel noise tests. Refer to Section 7.1 and 7.2.		■			■

MECHANICAL CHECK
Attention: Check torque of wheel nuts after the first 5-100 miles (8-160 km) from date vehicle was placed into service and after every wheel removal. Continually check wheel torque every 10,000 miles (16,000 km), or at the intervals indicated in your vehicle owner's manual, whichever occurs first.

SPECIAL SERVICE CONDITIONS	
Vehicles with long standing periods.	Service at specified time intervals, e.g. trailer used for storage or frequently left standing for several days at a time.
Vehicles used under severe duty and extreme conditions.	Service at suitably reduced intervals, e.g. trailer operating in continuous multi-shifts or in off-road construction sites.

XL-SA20024UM-en-US Rev G · 2023-09-19 · Amendments and Errors Reserved · © SAF-HOLLAND, Inc., SAF-HOLLAND, HOLLAND, SAF, and logos are trademarks of SAF-HOLLAND S.A., SAF-HOLLAND GmbH, and SAF-HOLLAND, Inc.

14. Troubleshooting Chart (SAF-HOLLAND suspensions equipped with disc brake axles)

PROBLEM	POSSIBLE CAUSE	POSSIBLE REMEDY
Brakes will NOT release	Disc brake caliper bound up	Lubricate or replace brake caliper
	Brake hoses restricted	Replace hoses
	Brake control valve restricted/inoperable	Repair/replace control valve
	Brake out of adjustment	Adjust brake/repair or replace automatic adjustment device as necessary
	Damaged brake chamber	Replace brake chamber
	Damaged brake assembly	Replace or repair brake assembly
	Supply air interrupted	Open glad hand cut-out cock or push brake control valve in
	Supply line improperly coupled	Properly couple supply air line
	Brake pads frozen to rotor in cold weather	Warm brakes
No brakes or insufficient brake performance	Service air interrupted	Open glad hand cut-out cock
	Service air line improperly coupled	Properly couple service air line
	Brake hoses restricted	Relieve restriction or obstruction or replace hoses
	Brake control valve restricted/inoperable	Repair/replace control valve
	Brake out of adjustment	Adjust brake/repair or replace automatic adjustment device as necessary
	Damaged brake chamber	Replace brake chamber
	Damaged brake assembly	Replace or repair brake assembly
Dragging Brakes/Slow brake application or release timing	Brake hoses restricted	Relieve restriction or obstruction or replace hoses
	Brake control valve restricted/inoperable	Repair/replace control valve
	Brake out of adjustment	Adjust brake/repair or replace automatic adjustment device as necessary
	Damaged brake chamber	Replace brake chamber
	Damaged brake assembly	Replace or repair brake assembly
Dog tracking	Axle not properly aligned	Align axle
	Slider assembly racked or NOT aligned properly	Repair or replace slider assembly
	Frame bent or NOT aligned properly	Repair or align frame
	Damaged suspension component	Repair or replace suspension component
	Bent axle	Replace axle
Uneven tire wear	Improper tire inflation	Inflate tire to proper pressure
	Loose wheel stud nuts	Inspect for and repair any resultant wheel end damage and tighten properly
	Excessive wheel end play	Inspect for and repair any resultant wheel end damage and end play (Section 7.1)
	Axle NOT properly aligned	Align axle
	Slider assembly racked or NOT aligned properly	Repair or replace slider assembly
	Frame bent or NOT aligned properly	Repair or align frame
	Damaged suspension component	Repair or replace suspension component
	Bent axle	Replace axle
	Mismatched tire sizes	Properly match tire sizes
	Unequal brake balance or timing	Repair brakes as necessary
	Overly aggressive braking	Instruct/train driver in proper brake use
	High speed turns	Instruct/train driver in proper vehicle speeds
	High level of side scrub	Instruct/train driver in proper vehicle maneuvering
	Anti-Lock Brake System malfunction	Refer to ABS manufacturer's service literature

PROBLEM	POSSIBLE CAUSE	POSSIBLE REMEDY
Grabbing brakes	Contaminants on brake lining	Replace brake pads
	Brake out of adjustment	Adjust brake/repair or replace automatic adjustment device as necessary
	Warped brake rotor	Machine or replace brake rotor
	Damaged brake chamber	Replace brake chamber
	Damaged brake assembly	Replace or repair brake assembly
	Unequal brake balance or timing	Repair brakes as necessary
	Anti-Lock Brake System malfunction	Refer to ABS manufacturer's service literature
Excessive heat cracks in rotor	Brake out of adjustment	Adjust brake/repair or replace automatic adjustment device as necessary
	Overly aggressive braking	Instruct/train driver in proper brake use
	Unequal brake balance or timing	Repair brakes as necessary
	Anti-Lock Brake System malfunction	Refer to ABS manufacturer's service literature
	Damaged brake chamber	Replace brake chamber
	Damaged brake assembly	Replace or repair brake assembly

XL-SA20024UM-en-US Rev G · 2023-09-19 · Amendments and Errors Reserved · © SAF-HOLLAND, Inc., SAF-HOLLAND, HOLLAND, SAF, and logos are trademarks of SAF-HOLLAND S.A., SAF-HOLLAND GmbH, and SAF-HOLLAND, Inc.

XL-SA20024UM-en-US Rev G · 2023-09-19 · Amendments and Errors Reserved · © SAF-HOLLAND, Inc., SAF-HOLLAND, HOLLAND, SAF, and logos are trademarks of SAF-HOLLAND S.A., SAF-HOLLAND GmbH, and SAF-HOLLAND, Inc.

ORIGINAL PARTS™

From fifth wheel rebuild kits to suspension bushing repair kits, SAF-HOLLAND Original Parts are the same quality components used in the original component assembly.

SAF-HOLLAND Original Parts are tested and designed to provide maximum performance and durability. Will-fits, look-alikes or, worse yet, counterfeit parts will only limit the performance potential and could possibly void SAF-HOLLAND's warranty. Always be sure to spec SAF-HOLLAND Original Parts when servicing your SAF-HOLLAND product.

SAF-HOLLAND USA • 888.396.6501 • Fax 800.356.3929
www.safholland.us

SAF-HOLLAND CANADA • 519.537.3494 • Fax 800.565.7753
WESTERN CANADA • 604.574.7491 • Fax 604.574.0244
www.safholland.ca

SAF-HOLLAND MEXICO • 52.55.5362.8743 • Fax 52.55.5362.8743
www.safholland.com.mx

info@safholland.com

SAF-HOLLAND, INC.
1950 Industrial Blvd., Muskegon, MI 49442
www.safholland.com

SAF-HOLLAND Group

XL-SA20024UM-en-US Rev G · 2023-09-19· Amendments and Errors Reserved · © SAF-HOLLAND, Inc., SAF-HOLLAND, HOLLAND, SAF, and logos are trademarks of SAF-HOLLAND S.A., SAF-HOLLAND GmbH, and SAF-HOLLAND, Inc.